AXOR

hansgrohe

Metropol
Single lever basin mixer 230 with lever handle and push-open waste set
Surfaces: **Chrome** Article Number: **32511000**

Description

product features

- consists of: single lever basin mixer, waste set
- ComfortZone 230
- projection 165 mm
- swivel range 120°
- spray type: normal spray
- maximum flow rate at 3 bar: 5 l/min
- ceramic cartridge
- temperature limitation adjustable
- suitable for continuous flow water heaters
- push-open waste set G 1¼
- material waste set: metal
- connection type: G ⅜ connections
- connection dimension: DN15
- handle position on the side: bottom-side at the base body (not suitable for wash bowls)

Technology

AirPower

EcoSmart

Comfort Zone

Design awards

DESIGN AWARD 2020

GERMAN DESIGN AWARD WINNER 2021

ICONIC AWARDS 2021 INNOVATIVE INTERIOR winner

GERMAN DESIGN AWARD SPECIAL 2018

ICONIC AWARDS 2020 INNOVATIVE ARCHITECTURE best of best

Product image

Scale drawing

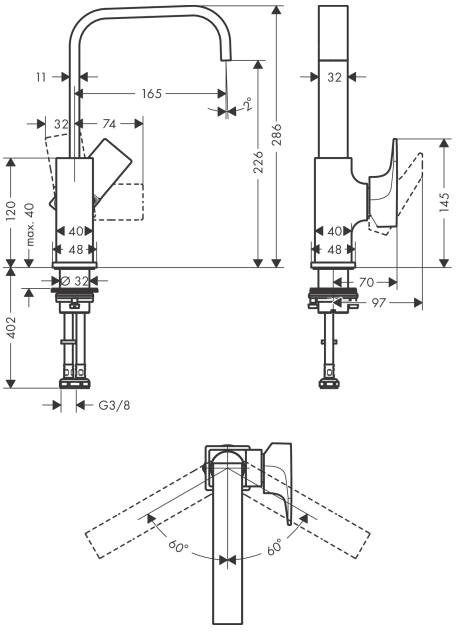

Metropol
Single lever basin mixer 230 with lever handle and push-open waste set
Surfaces: **Chrome** Article Number: **32511000**

Flowchart

Metropol
Single lever basin mixer 230 with lever handle and push-open waste set
Surfaces: **Chrome** Article Number: **32511000**

Exploded Drawing

Year of production: **>10/17**

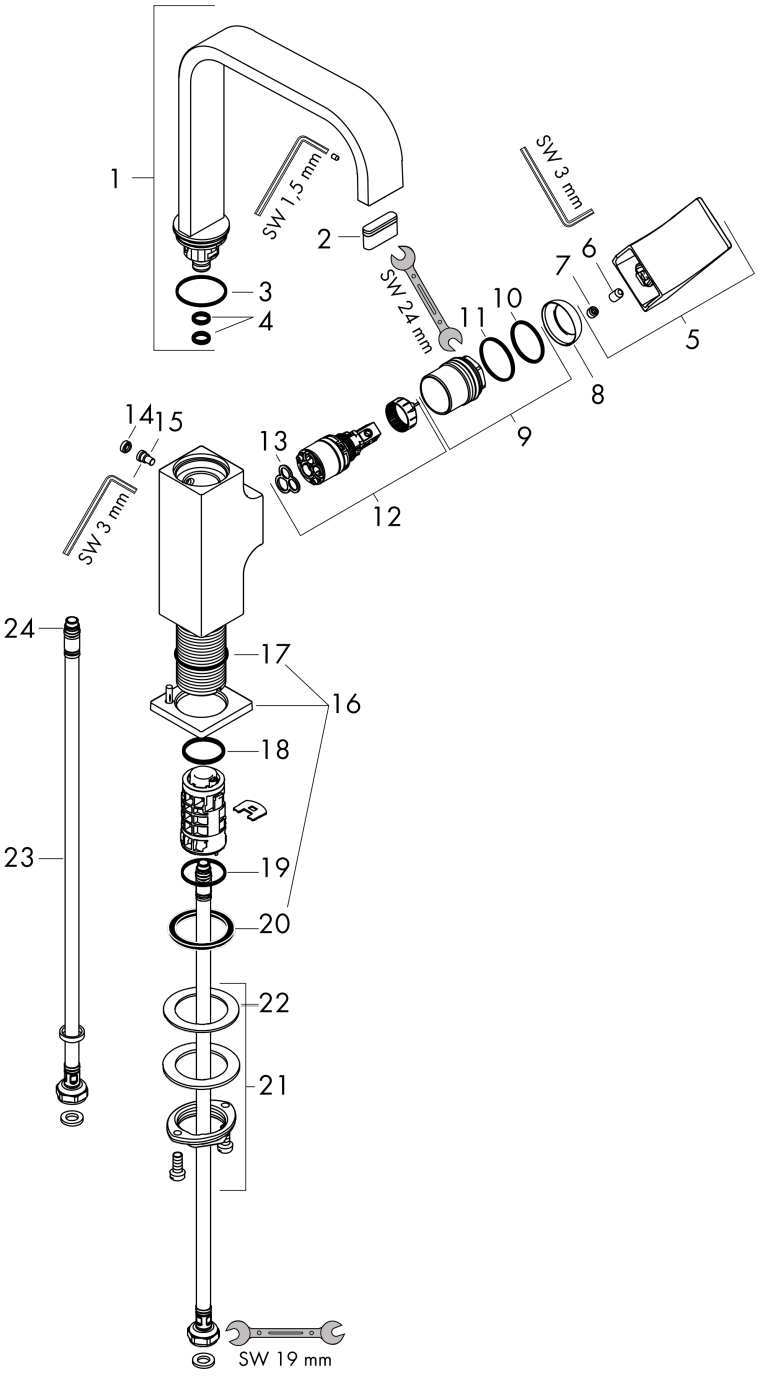

Metropol
Single lever basin mixer 230 with lever handle and push-open waste set
Surfaces: **Chrome** Article Number: **32511000**

Spare part list

Year of production: **>10/17**

Pos.	Description	Article Number	Price	PU
1	spout 165 mm	93084000	-	1
2	spray former	93085000	-	1
3	O-ring 30x1,5	98433000	-	1
4	O-ring 8x2	98112000	-	1
5	handle	93082000	-	1
6	hollow set screw M6x10 DIN 916	96029000	-	1
7	screw cover	95704000	-	1
8	flange	95493000	-	1
9	nut	93086000	-	1
10	O-Ring 22x2	98185000	-	1
11	O-ring 27x1,5	92527000	-	1
12	cartridge, assy	97685000	-	1
13	seal	98865000	-	1
14	plug	93087000	-	1
15	screw	93088000	-	1
16	escutcheon	93048000	-	1
17	O-ring 32x1,5	92936000	-	1
18	O-ring 24x2	98388000	-	1
19	O-ring 26x1,5	98390000	-	1
20	flat seal	98749000	-	1
21	fixing set (Ø 32)	13961000	-	1
22	lever collar	97548000	-	1
23	connection hose 450 mm M8x0,75 G3/8	97206000	-	1
24	O-ring 6,6x1,6	93019000	-	1
a	push-open waste set	50100000	-	1
b	fixation extension 35 mm	13898000	-	1